Benelli Care

Bassin Basins

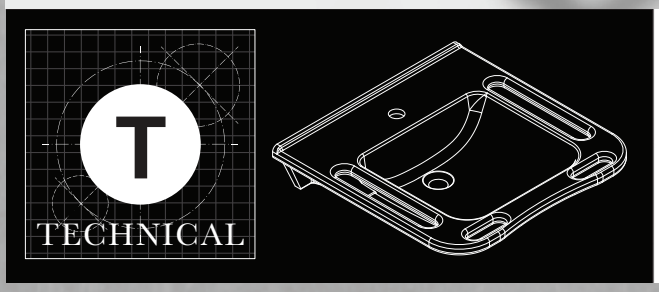

Specifications

WBM-602-550

* Freedom Care Mixer 38119 and Accessories are not included. Additional Tap Holes upon request.

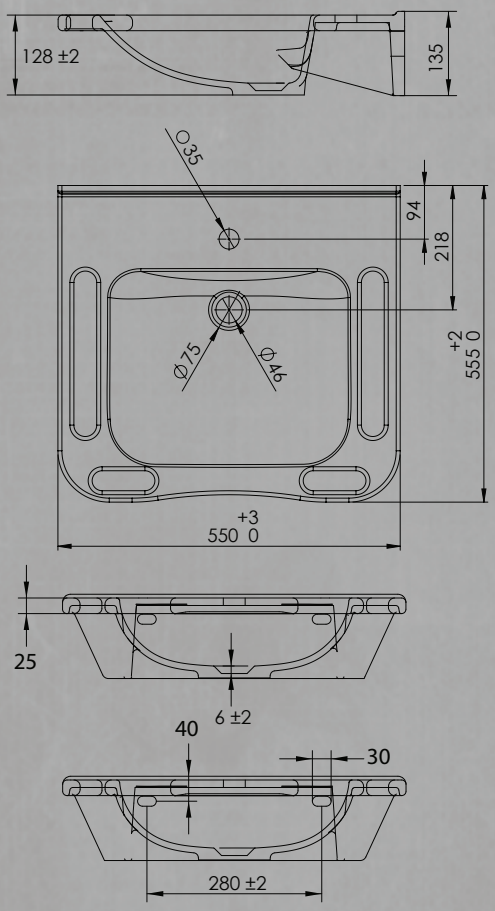

BENELLI
SOLID RESIN
WBM-602-550

Features

True Solid Surface Resin Washbasin
Integrated Handles & Towel Bars
Single Tap Hole Standard*
5 Years Limited Manufacturers Warranty
1 Year Limited Commercial Warranty
No Overflow (Overflow Optional)
Plug & Waste Not Included

Compliance

Suitable for installation to comply
to Australian Standard AS 1428.1-2009
Design for access and mobility

www.standards.org.au

All installations should be carried out by a qualified tradesman in compliance with the national Plumbing & Drainage Code and any State or Local Authority Regulations, in accordance with AS/NZS 3500 series of standards and AS/NZA 6400.