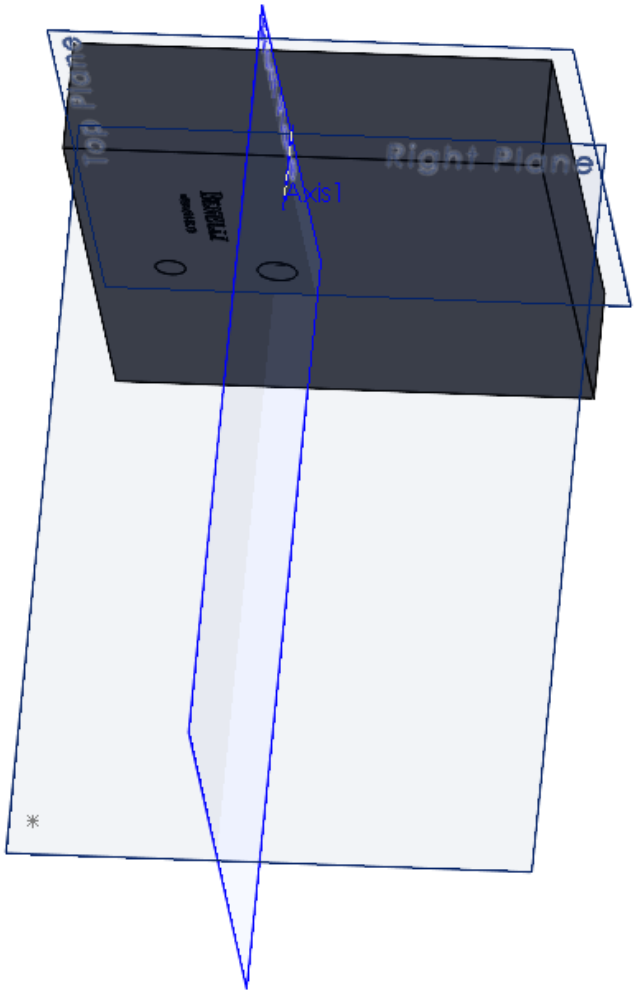
Right Plane
Axis1
Top Plane